TFT MODULE SPECIFICATION

# RVT43ALBNWC00 V3

4.3" EVE 3 LCD TFT DATASHEET
Rev. 1.0
2026-11-18

**Riverdi Sp. z o.o.**

Nowy Swiat 36
80-299 Gdansk, Poland
VAT ID: PL5842767153
Registration number (KRS): 0000923967

**+48 587 703 116**

Office hours: 9:00 to 17:30 CET (Mon-Fri)

contact@riverdi.com

riverdi.com

| ITEM | CONTENTS | UNIT |
|---|---|---|
| LCD Type | TFT/Transmissive/Normally white | / |
| Size | 4.3 | Inch |
| Viewing Direction | 12:00 (without image inversion) | O' Clock |
| Gray Scale Inversion Direction | 6:00 | O' Clock |
| Outside Dimensions (W x H x D) | 105.50 x 67.20 x 8.29 | mm |
| Active Area (W x H) | 95.04 x 53.86 | mm |
| Pixel Pitch (W x H) | 0.198 x 0.198 | mm |
| Resolution | 480 x 272 (RGB) | / |
| Surface luminance | 500 | cd/m² |
| Interface Type | SPI/QSPI | / |
| Module Memory Size | 1 MB (BT815) + 64 Mb (external flash) | / |
| Color Depth | 16.7 M | / |
| Pixel Arrangement | RGB Vertical Stripe | / |
| Driver IC of Board | BT815 | / |
| With/Without Touch | With Capacitive Touch Panel | / |
| TP Driver | FT5446U | / |
| LCD Input Voltage | 3.3 | V |
| Weight | TBD | g |

**Note 1.** RoHS compliant

**Note 2.** LCM weight tolerance: ± 5%.

# 1. REVISION RECORD

| REV NO. | REV DATE | CONTENTS | REMARKS |
|---|---|---|---|
| 1.0 | 2026-11-18 | Initial Release, PCN: RVD002-107 | |

# 2. CONTENTS


1. REVISION RECORD ..... 3
2. CONTENTS ..... 4
3. MODULE CLASSIFICATION INFORMATION ..... 5
4. MODULE DRAWING ..... 6
5. ABSOLUTE MAXIMUM RATINGS ..... 7
6. ELECTRICAL CHARACTERISTICS ..... 7
7. BACKLIGHT ELECTRICAL CHARACTERISTICS ..... 7
8. ELECTRO-OPTICAL CHARACTERISTICS ..... 8
9. INTERFACES DESCRIPTION ..... 11
   - 9.1 CN2 connector - RiBUS description ..... 11
10. BT815 CONTROLLER SPECIFICATIONS ..... 12
    - 10.1 Serial host interface ..... 12
    - 10.2 Block diagram ..... 12
    - 10.3 Host interface SPI mode 0 ..... 13
    - 10.4 Backlight driver block diagram ..... 13
11. TFT TIMING CHARACTERISTICS ..... 14
    - 11.1 Parallel 24-bit RGB input timing table ..... 14
    - 11.2 SYNC Mode Timing Diagram ..... 15
    - 11.3 SYNC-DE Mode Timing Diagram ..... 16
    - 11.4 DE Mode Timing Diagram ..... 17
12. INSPECTION ..... 17
13. RELIABILITY TEST ..... 18
14. LEGAL INFORMATION ..... 19
15. CONTACT ..... 20

# 3. MODULE CLASSIFICATION INFORMATION

| RV | T | 43 | A | L | B | N | W | C | 00 | V3 |
|---|---|---|---|---|---|---|---|---|---|---|
| 1. | 2. | 3. | 4. | 5. | 6. | 7. | 8. | 9. | 10. | 11. |

| NO. | PARAMETER | SYMBOL |
|---|---|---|
| 1. | BRAND | RV – Riverdi |
| 2. | PRODUCT TYPE | T – TFT Standard |
| 3. | DISPLAY SIZE | 43 – 4.3” |
| 4. | MODEL SERIAL NO. | A – (A-Z) |
| 5. | RESOLUTION | L – 480 x 272 px |
| 6. | INTERFACE | B – TFT + Controller BT815 |
| 7. | FRAME | N – Without Mounting Metal Frame |
| 8. | BACKLIGHT TYPE | W – LED White |
| 9. | TOUCH PANEL | C – Capacitive Touch Panel |
| 10. | VERSION | 00 – version |
| 11. | MODULE REVISION | V3 |

© 2026 Riverdi

| Revision: | Changes: | Date: |
|---|---|---|
| 1.0 | Initial Case, PCN: RVD002-107 | 2026.11.18 |

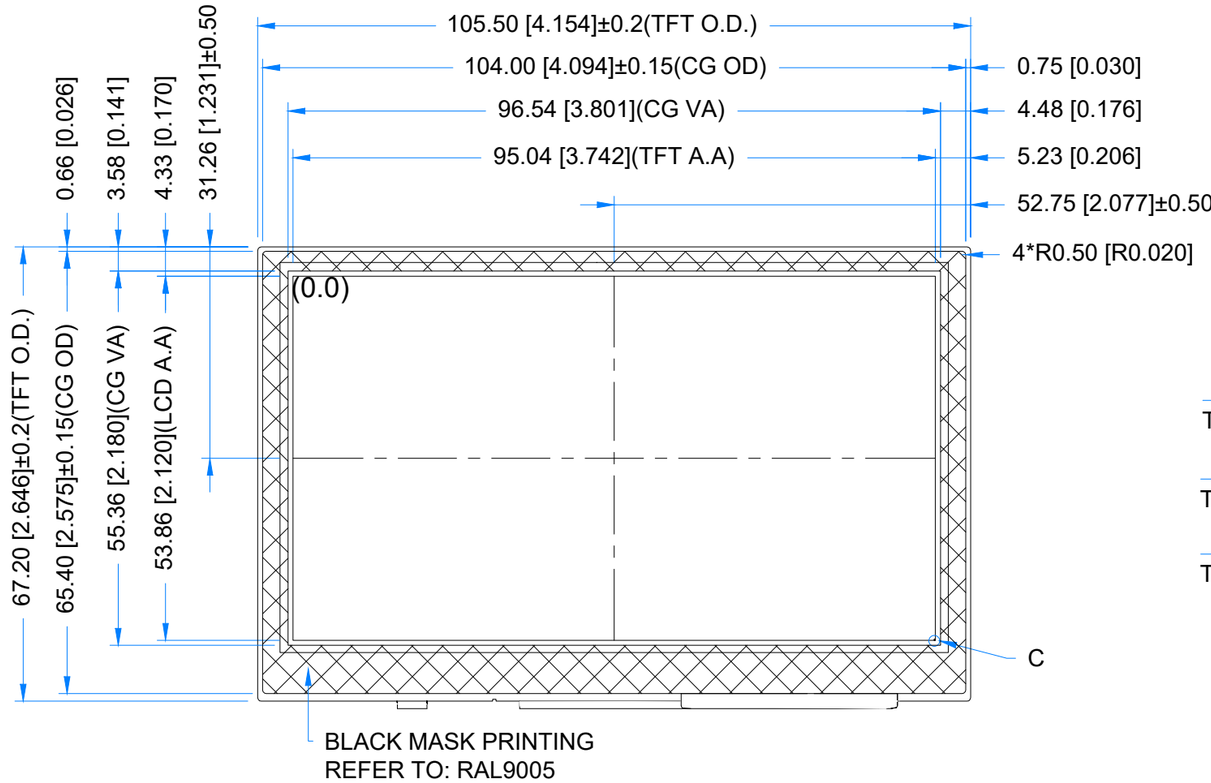


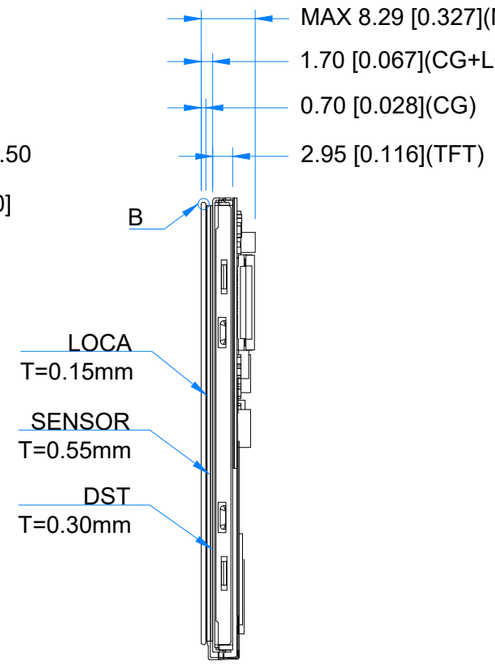


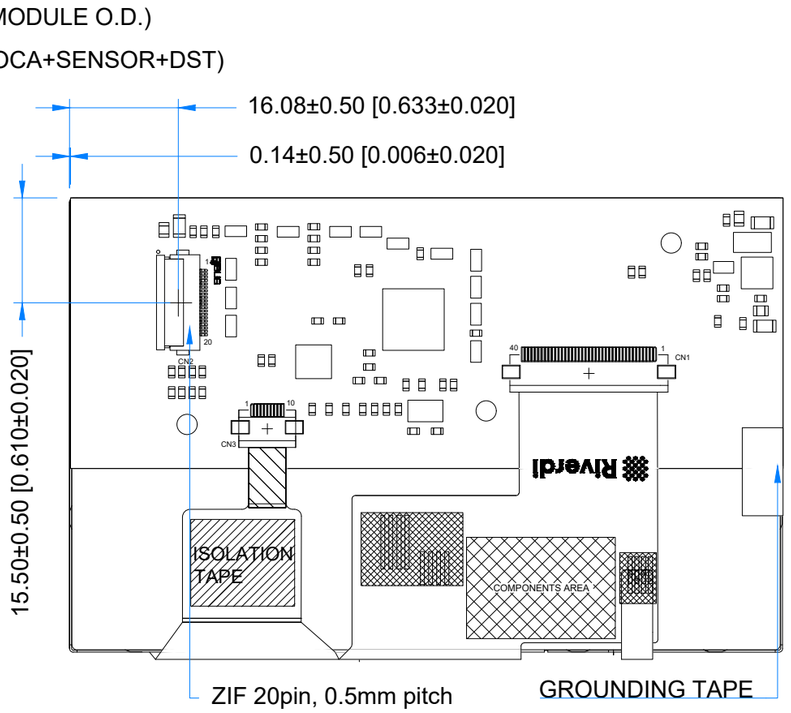


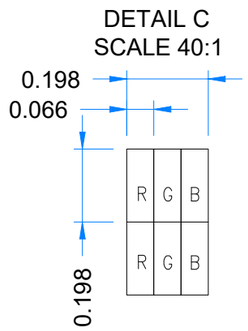


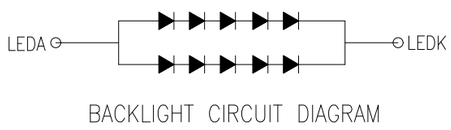


BACKLIGHT CIRCUIT DIAGRAM

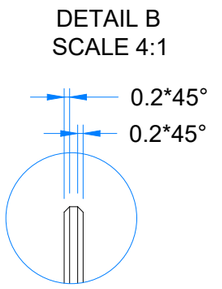


**TFT NOTES:**
1. DISPLAY TYPE: TRANSMISSIVE, NORMALLY WHITE
2. RESOLUTION: 480x272
3. VIEWING ANGLE: 12 O'CLOCK
4. INTERFACE: SPI/I2C
5. DRIVER IC ON THE BOARD: BT815
6. SUPPLY VOLTAGE FOR MODULE: 3.3V
7. SUPPLY VOLTAGE FOR BACKLIGHT: 5.0V, BUILT-IN LED DRIVER

**TP NOTES:**
1. TP STRUCTURE: G+G
2. CG THICKNESS: 0.70mm
3. DRIVER IC: FT5446U
4. SURFACE HARDNESS: 7H
5. INTERFACE: SPI VIA RIBUS AND BT815

**GENERAL NOTES:**
1. SURFACE LUMINANCE: 500cd/$m^2$
2. OPERATING TEMPERATURE: -20°C ~ 70°C
3. STORAGE TEMPERATURE: -30°C ~ 80°C
4. WITHOUT INDIVIDUAL TOLERANCE: ±0.3mm
5. RoHS COMPLIANT

| | | | | |
|---|---|---|---|---|
| PN: RVT43ALBNWC00 V3 | | | | |
| SN: | | | | |
| DRAWN: | M.Stabinski | 2026.11.18 | 1:0.91 | |
| CHECKED: | M.Wierzbowski | 2026.11.18 | [mm] | |
| APPR: | M.Wierzbowski | 2026.11.18 | ISO A3 | P. 1 of 1 |

# 5. ABSOLUTE MAXIMUM RATINGS

| PARAMETER | SYMBOL | MIN | MAX | UNIT |
|---|---|---|---|---|
| Power Supply Voltage | VDD | 0 | 4.0 | V |
| Digital I/O signals (SPI/QSPI/GPIO) Voltage | VIN | 0 | 4.0 | V |
| Supply voltage for Backlight | BLVDD | 0 | 7.0 | V |
| Operating Temperature | $T_{OP}$ | -20 | 70 | °C |
| Storage Temperature | $T_{ST}$ | -30 | 80 | °C |

# 6. ELECTRICAL CHARACTERISTICS

| PARAMETER | SYMBOL | MIN | TYP | MAX | UNIT | NOTE |
|---|---|---|---|---|---|---|
| Supply Voltage for Module | VDD | 3.0 | 3.3 | 3.6 | V | |
| Input Voltage for LED Inverter | BLVDD | 2.8 | 5.0 | 5.5 | V | |
| LED Backlight Current | $IDD_{backlight}$ | - | 260 | 325 | mA | BLVDD=3.3V |
| LED Backlight Current | $IDD_{backlight}$ | - | 150 | 187 | mA | BLVDD=5V |
| Input Voltage “H” Level | $V_{IH}$ | 0.7VDD | - | VDD | V | |
| Input Voltage “L” Level | $V_{IL}$ | 0 | - | 0.2VDD | V | |

# 7. BACKLIGHT ELECTRICAL CHARACTERISTICS

| PARAMETER | SYMBOL | MIN | TYP | MAX | UNIT |
|---|---|---|---|---|---|
| Backlight Lifetime | - | 30,000 | 50,000 | - | hours |

**Note:** Operating lifetime means brightness goes down to 50% initial brightness; The lifetime of LED will be reduced if LED is driven by high current, high ambient temperature and humidity conditions. Typical operating lifetime is an estimated data.

# 8. ELECTRO-OPTICAL CHARACTERISTICS

| ITEM | SYMBOL | CONDITION | MIN | TYP | MAX | UNIT | RMK | NOTE |
|---|---|---|---|---|---|---|---|---|
| Response Time | Tr+Tf | θ=0° ø=0° Ta=25 °C | - | 25 | 50 | ms | FIG 1. | 4, 7 |
| Contrast Ratio | Cr | | 400 | 500 | - | --- | FIG 2. | 1, 7 |
| Luminance Uniformity | δ WHITE | | 80 | - | - | % | | 3 |
| Surface Luminance | Lv | | - | 500 | - | cd/m 2 | | 2, 7 |
| Viewing Angle Range | θ | ø = 90° | 40 | 50 | - | deg | FIG 3. | 6 |
| | | ø = 270° | 60 | 70 | - | deg | | |
| | | ø = 0° | 60 | 70 | - | deg | | |
| | | ø = 180° | 60 | 70 | - | deg | | |
| CIE (x, y) Chromaticity | Rx | θ=0° ø=0° Ta=25 °C | 0.546 | 0.596 | 0.646 | - | FIG 2. | 5,7 |
| | Ry | | 0.312 | 0.362 | 0.412 | - | | |
| | Gx | | 0.277 | 0.327 | 0.377 | - | | |
| | Gy | | 0.524 | 0.574 | 0.624 | - | | |
| | Bx | | 0.097 | 0.147 | 0.197 | - | | |
| | By | | 0.016 | 0.066 | 0.116 | - | | |
| | Wx | | 0.236 | 0.286 | 0.336 | - | | |
| | Wy | | 0.256 | 0.306 | 0.356 | - | | |
| NTSC ratio | - | - | | 55.2 | - | % | | |

**Note 1.** Contrast Ratio (CR) is defined mathematically as below, for more information see Figure 2.

$$\text{Contrast Ratio} = \frac{\text{Average Surface Luminance with all white pixels (P1, P2, P3, P4, P5)}}{\text{Average Surface Luminance with all black pixels (P1, P2, P3, P4, P5)}}$$

**Note 2.** Surface luminance is the LCD surface from the surface with all pixels displaying white. For more information see Figure 2.

Lv = Average Surface Luminance with all white pixels (P1, P2, P3, P4, P5)

**Note 3.** The uniformity in surface luminance δ WHITE is determined by measuring luminance at each test position 1 through 5, and then dividing the minimum luminance of 5 points luminance by maximum luminance of 5 points luminance. For more information see Figure 2.

$$\delta \text{ WHITE} = \frac{\text{Minimum Surface Luminance with all white pixels (P1, P2, P3, P4, P5)}}{\text{Maximum Surface Luminance with all white pixels (P1, P2, P3, P4, P5)}}$$

**Note 4.** Response time is the time required for the display to transition from white to black (Rise Time, Tr) and from black to white (Decay Time, Tf). For additional information see Figure 1. The test equipment is BM-7A.

**Note 5.** CIE (x, y) chromaticity, the x, y value is determined by measuring luminance at each test position 1 through 5, and then make average value.

**Note 6.** For TFT module, viewing angle is the angle at which the contrast ratio is greater 10. The angles are determined for the horizontal or x axis and the vertical or y axis with respect to the z axis which is normal to LCD surface. For more information see Figure 3.

**Note 7.** Viewing angle is measured at the center point of the LCD by CONOSCOPE (ergo-80). For response time testing, the testing data is based on BM-7A. Instruments for Contrast Ratio, Surface Luminance, Luminance Uniformity, Chromaticity the test data is based on SR-3A.

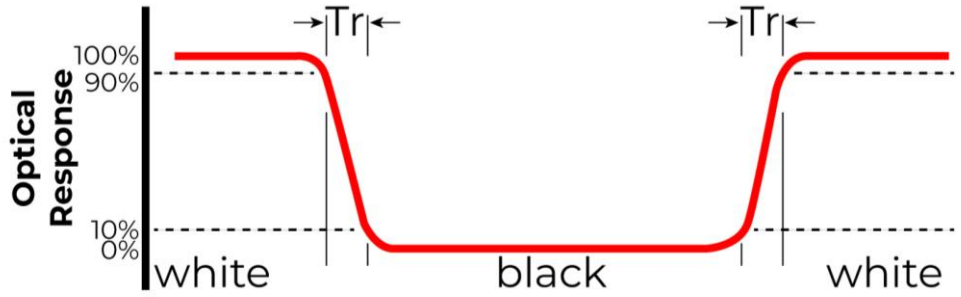


*Figure 1. The definition of response time*

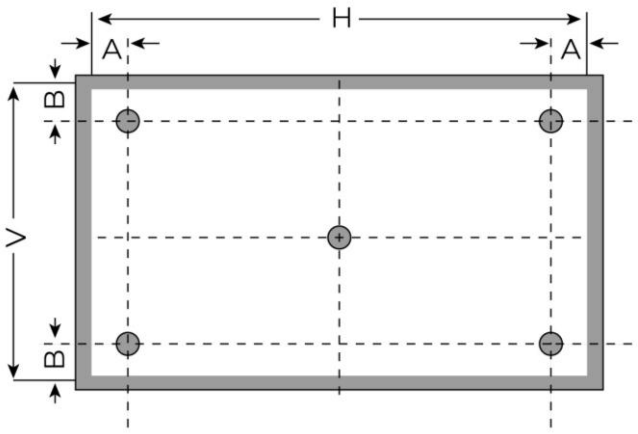


A: 5mm

B: 5mm

H, V: Active Area

Light spot size ∅=5mm, 500mm distance from the LCD surface to detector lens.

Measurement instrument is SR-3A

*Figure 2. Measuring method for Contrast ratio, surface luminance, Luminance uniformity, CIE (x, y) chromaticity*

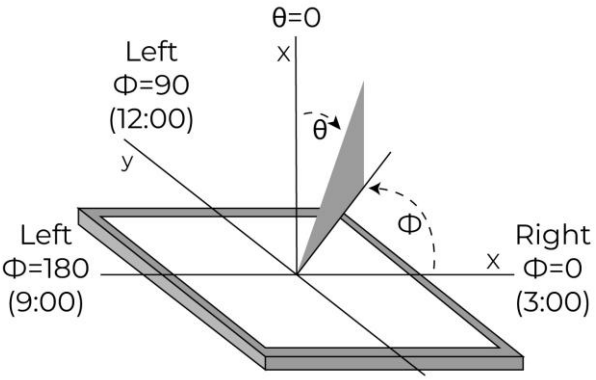


*Figure 3. The definition of viewing angle*

# 9. INTERFACES DESCRIPTION

## 9.1 CN2 connector - RiBUS description

| PIN | SYMBOL | DESCRIPTION |
|---|---|---|
| 1 | VDD | Power Supply |
| 2 | GND | Ground |
| 3 | SPI_SCLK | SPI SCK Signal, Internally 47k Pull UP |
| 4 | MISO/ IO1 | SPI MISO Signal / SPI Quad mode: SPI data line 1 |
| 5 | MOSI/ IO0 | SPI MOSI Signal / SPI Quad mode: SPI data line 0 |
| 6 | CS | SPI Chip Select Signal , Internally 47k Pull UP |
| 7 | INT | Interrupt Signal, Active Low, Internally 47k Pull UP |
| 8 | PD | Power Down Signal, Active Low, Internally 47k Pull UP |
| 9 | NC | Not Connected |
| 10 | AUDIO_OUT | Audio Out Signal |
| 11 | GPIO0/IO2 | SPI Single mode: General purpose IO0/SPI Quad mode: SPI data line 2 |
| 12 | GPIO1/IO3 | SPI Single mode: General purpose IO1/SPI Quad mode: SPI data line 3 |
| 13 | GPIO2 | General purpose IO2 |
| 14 | GPIO3 | General purpose IO3 or analog input for ADC |
| 15 | NC | Not Connected |
| 16 | NC | Not Connected |
| 17 | BLVDD | Backlight Power Supply, Can Be Connected to VDD |
| 18 | BLVDD | Backlight Power Supply, Can Be Connected to VDD |
| 19 | BLGND | Backlight Ground, Internally connected to GND |
| 20 | BLGND | Backlight Ground, Internally connected to GND |

© 2026 Riverdi

# 10. BT815 CONTROLLER SPECIFICATIONS

BT815 or EVE3 (Embedded Video Engine 3) simplifies the system architecture for advanced human machine interfaces (HMIs) by providing functionality for display, audio, and touch as well as an object oriented architecture approach that extends from display creation to the rendering of the graphics.

## 10.1 Serial host interface

*Figure 4. SPI interface connection*

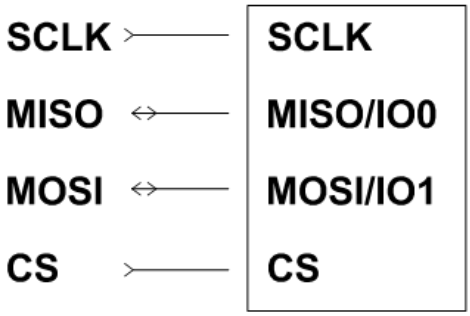


*Figure 5. QSPI interface connection*

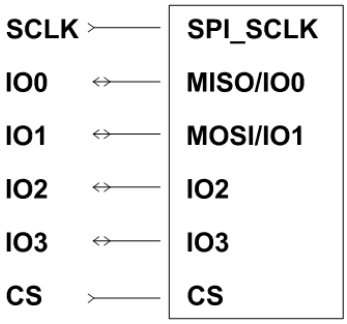


**SPI Interface** – the SPI slave interface operates up to 30MHz.

Only SPI mode 0 is supported. The SPI interface is selected by default (MODE pin is internally pulled low by 47k resistor).

## 10.2 Block diagram

*Figure 6. BT8x Block diagram*

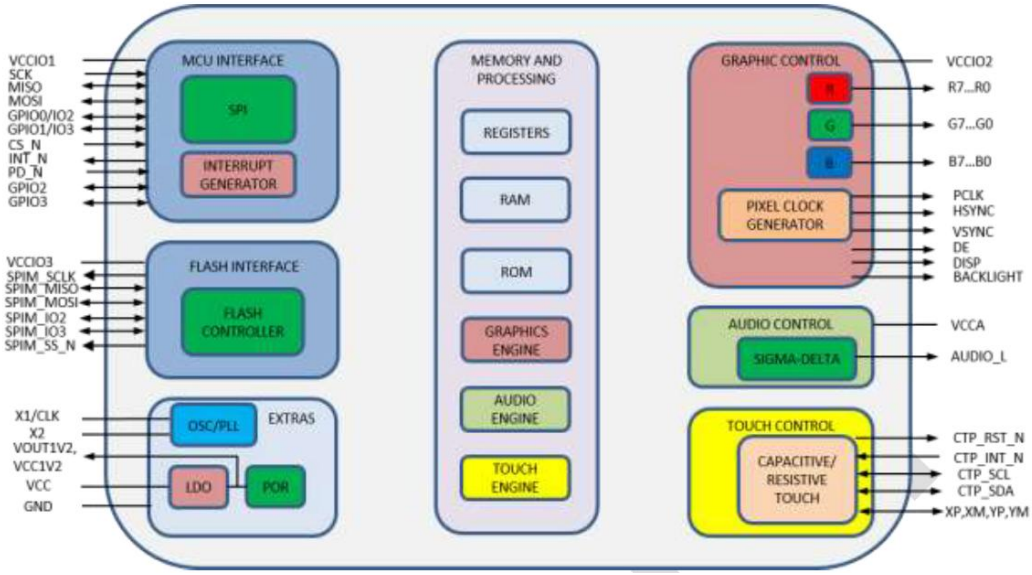

## 10.3 Host interface SPI mode 0

*Figure 7. SPI timing diagram*

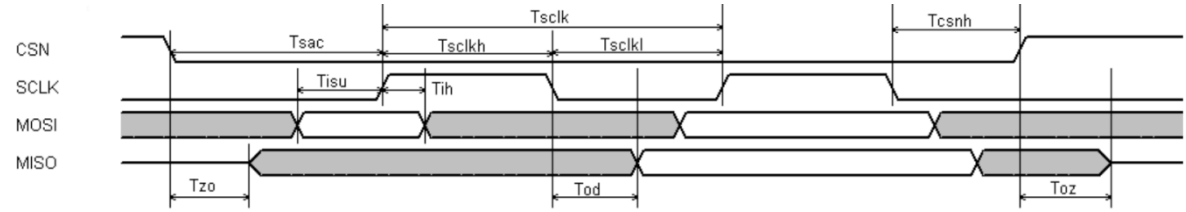


*For more information about BT815 controller please go to official BT81X website.*

*https://www.ftdichip.com/Products/ICs/BT81X.html*

## 10.4 Backlight driver block diagram

Backlight enable signal is internally connected to BT815 Backlight control pin. This pin is controlled by two BT815's registers. One of them specifies the PWM output frequency, second one specifies the duty cycle. Refer to BT8x datasheet for more information.

*Figure 8. Backlight driver block diagram*

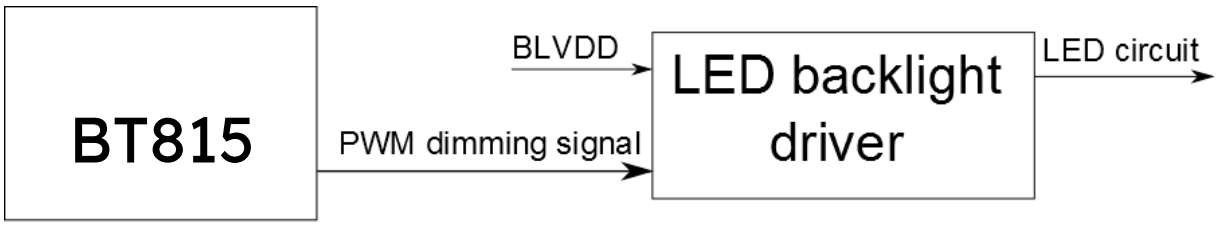

# 11. TFT TIMING CHARACTERISTICS

## 11.1 Parallel 24-bit RGB input timing table

| PARAMETER | SYMBOL | MIN | TYP | MAX | UNIT | REMARK |
|---|---|---|---|---|---|---|
| DCLK Frequency | Fclk | 8 | 9 | 12 | MHz | |
| DCLK Period | Tclk | 83 | 111 | 125 | ns | |
| HSYNC Period Time | Th | 485 | 531 | 598 | DCLK | |
| HSYNC Display Period | Thdisp | | 480 | | DCLK | |
| HSYNC Back Porch | Thbp | 3 | 43 | 43 | DCLK | By H_blanking setting |
| HSYNC Front Porch | Thfp | 2 | 8 | 75 | DCLK | |
| HSYNC Pulse Width | Thw | 2 | 4 | 75 | DCLK | |
| VSYNC Period Time | Tv | 276 | 292 | 321 | HSYNC | |
| VSYNC Display Period | Tvdisp | | 272 | | HSYNC | |
| VSYNC Back Porch | Tvbp | 2 | 12 | 12 | HSYNC | By V_blanking setting |
| VSYNC Front Porch | Tvfp | 2 | 8 | 37 | HSYNC | |
| VSYNC Pulse Width | Tvw | 2 | 4 | 37 | HSYNC | |

## 11.2 SYNC Mode Timing Diagram

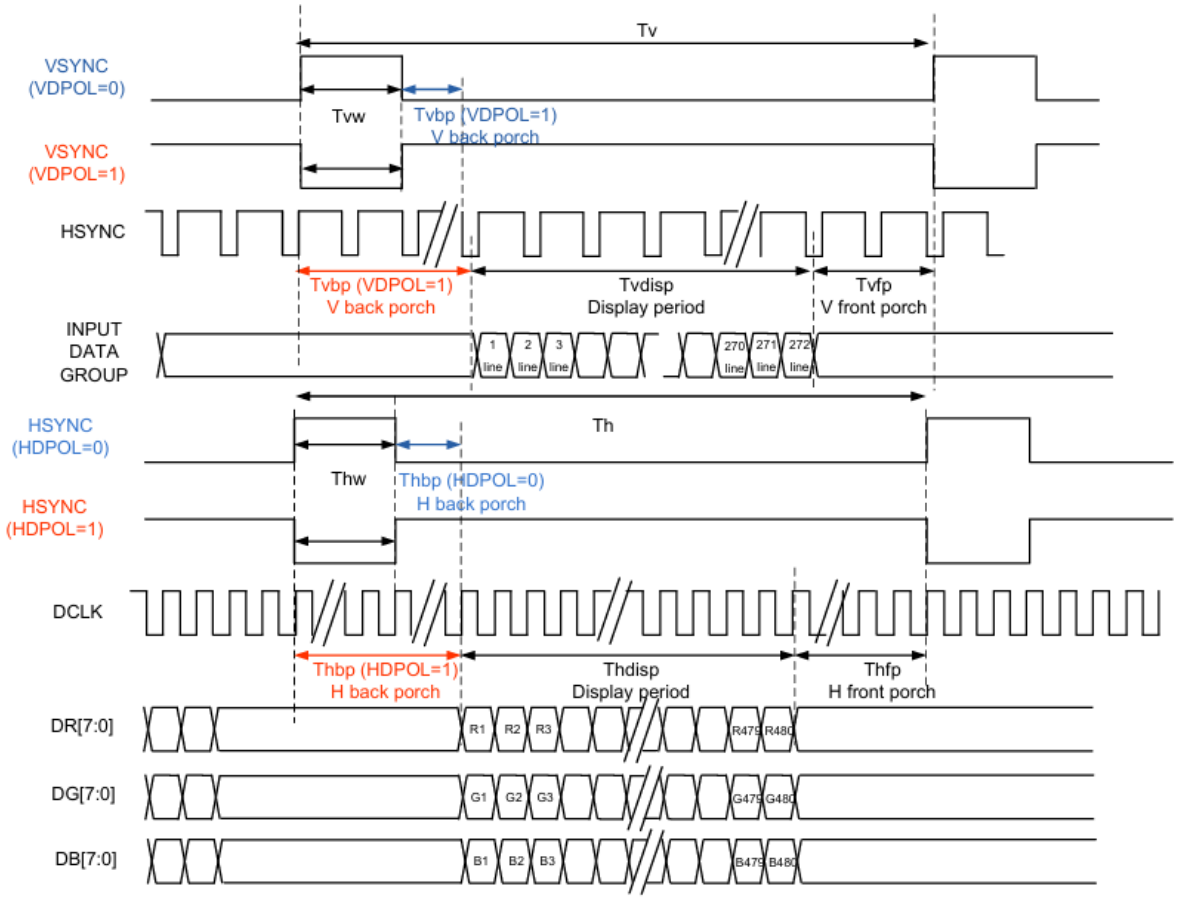

## 11.3 SYNC-DE Mode Timing Diagram

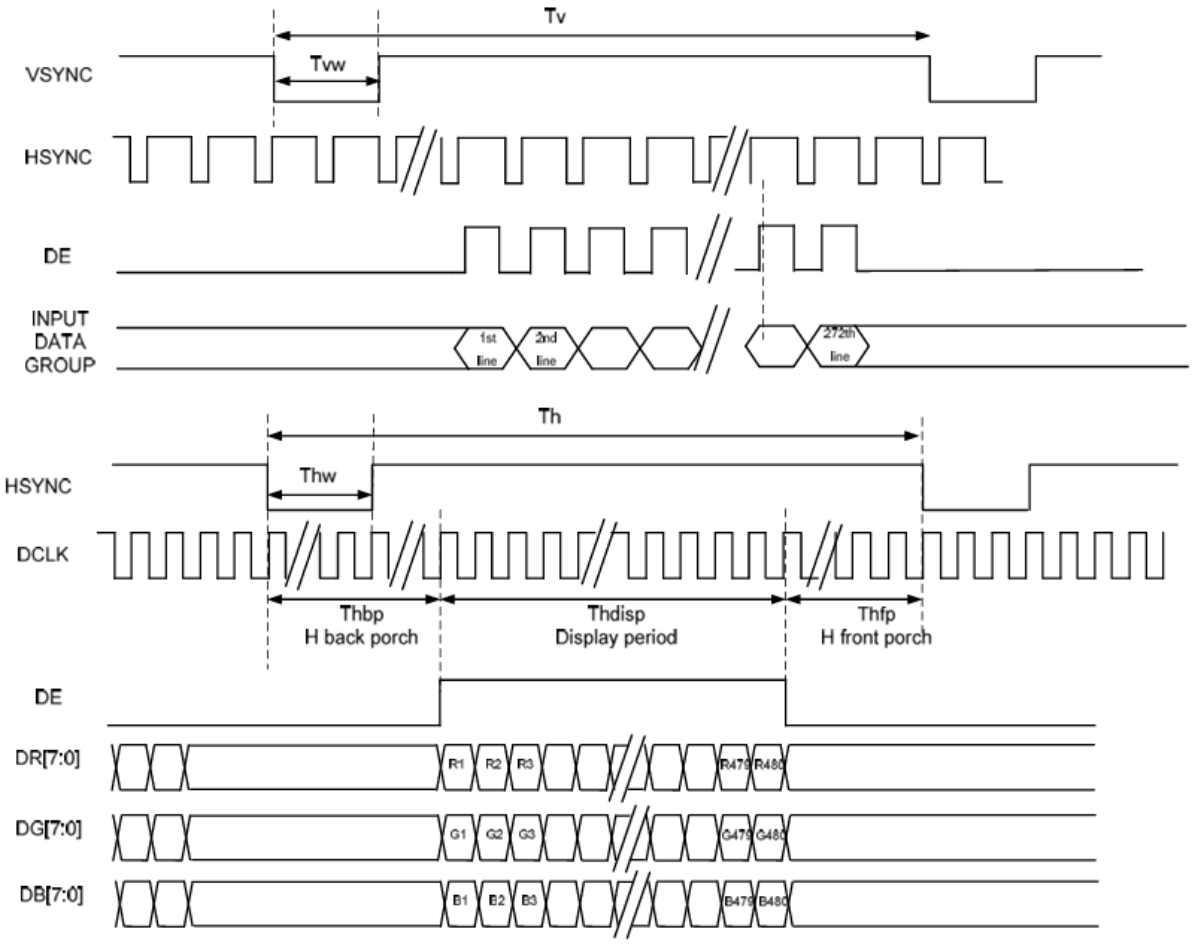

## 11.4 DE Mode Timing Diagram

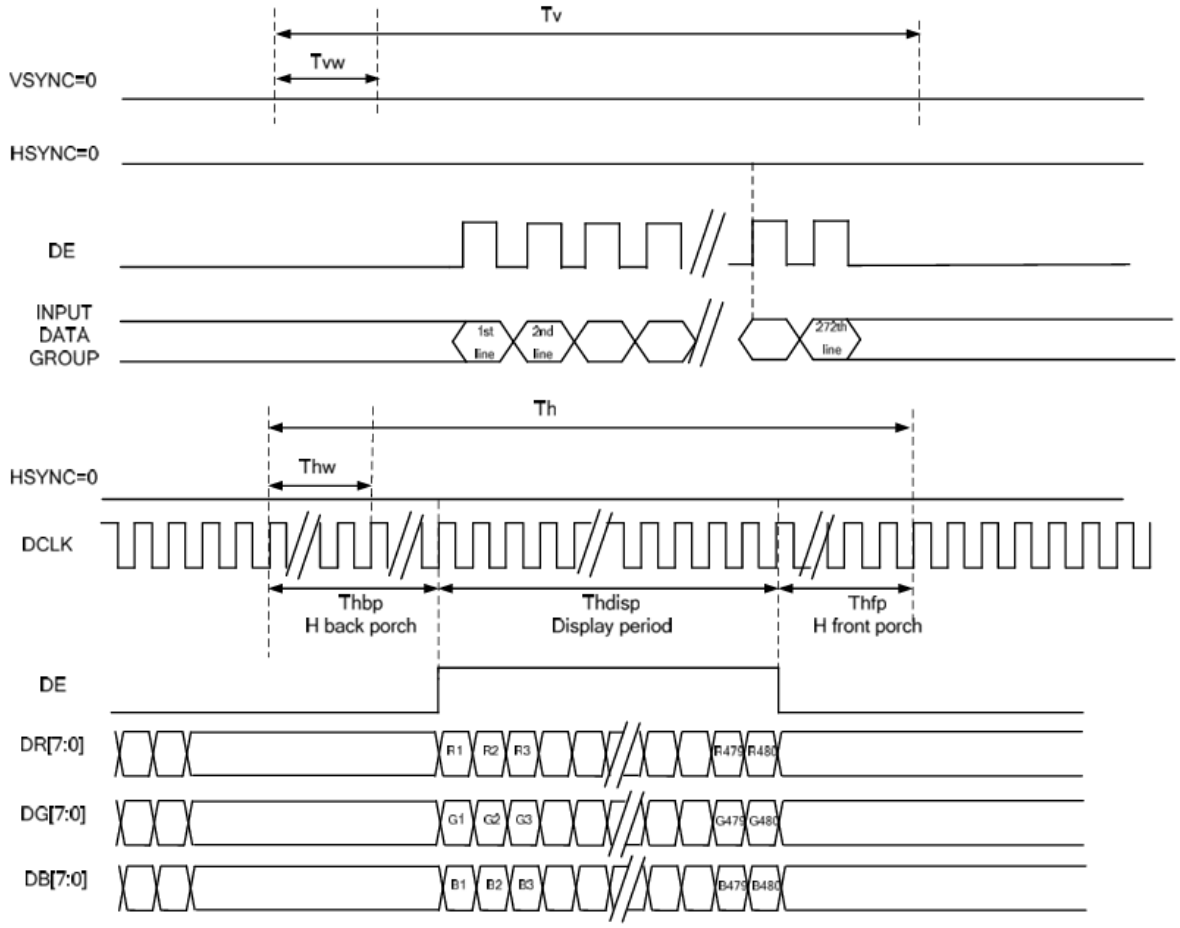


# 12. INSPECTION

Standard acceptance/rejection criteria for TFT module according to document available here.

# 13. RELIABILITY TEST

| NO. | TEST ITEM | TEST CONDITION | NOTE |
|---|---|---|---|
| 1 | High Temperature Storage | 80℃ ± 2℃ / 240Hrs. | IEC60068-2-2<br>GB2423.2 |
| 2 | Low Temperature Storage | -30℃ ± 2℃ / 240Hrs. | IEC60068-2-1<br>GB2423.1 |
| 3 | High Temperature Operating | 70℃ ± 2℃ / 240Hrs. | IEC60068-2-2<br>GB2423.2 |
| 4 | Low Temperature Operating | -20℃ ± 2℃ / 240Hrs. | IEC60068-2-1<br>GB2423.1 |
| 5 | High Temperature and High Humidity Operation Test | 60 ± 5℃, 90%RH 240Hrs. | IEC60068-2-3<br>GB/T2423.3 |
| 6 | Thermal Shock Test (Non-operating) | -20±2℃(30Min.)~25±2℃(5Min.)~60±2℃(30Min.) 10Cycles | IEC60068-2-14<br>GB2423.22 |
| 7 | Vibration Test (Non-operating) | Frequency: 10~55Hz<br>Amplitude: 1.5mm<br>Sweep Time: 11Mins<br>Test Period: 6 Cycles For Each Direction of X, Y, Z (Packing Condition) | IEC60068-2-6<br>GB2423.10 |
| 8 | Electro Static Discharge Test | R: 330Ω, C:150pF, 5points/panel<br>Air: ±8KV, 10times; Contact: ±4KV, 10times; (Environment: 15℃~35℃, 30%~60%, 86Kpa~106Kpa) | IEC61000-4-2<br>GB/T17626.2 |

**Notes**

A. LCM each function is OK.
B. LCM appearance inspection without abnormalities (Including scratch, damage, corrosion and serious deformation)
C. LCM brightness above the Min. value of Spec.
D. Luminance uniformity above the Min. value of Spec.
E. Color chromaticity within tolerance range.

# 14. LEGAL INFORMATION

CE marking is usually obligatory only for a complete end product. Riverdi display modules are semi-finished goods which are used as inputs to become part of the finished products.

Therefore, Riverdi display modules are not CE marked.

This is not a standalone product. It was designed as an electronic component. It needs integration with a whole system to be fully functional.

Riverdi grants the guarantee for the proper operation of the goods for a period of 12 months from the date of possession of the goods. If in a consequence of this guaranteed execution the customer has received the defects-free item as replacement for the defective item, the effectiveness period of this guarantee shall start anew from the moment the customer receives the defects-free item.

Information about device is the property of Riverdi and may be the subject of patents pending or granted. It is not allowed to copy or disclosed this document without prior written permission.

Riverdi endeavors to ensure that all contained information in this document is correct but does not accept liability for any error or omission. Riverdi products are in developing process and published information may be not up to date. Riverdi reserves the right to update and makes changes to Specifications or written material without prior notice at any time. It is important to check the current position with Riverdi.

Images and graphics used in this document are only for illustrative the purpose. All images and graphics are possible to be displayed on the range products of Riverdi, however the quality may vary. Riverdi is no liable to the buyer or to any third party for any indirect, incidental, special, consequential, punitive, or exemplary damages (including without limitation lost profits, lost savings, or loss of business opportunity) relating to any product, service provided or to be provided by Riverdi, or the use or inability to use the same, even if Riverdi has been advised of the possibility of such damages.

Riverdi products are not fault tolerant nor designed, manufactured or intended for use or resale as on line control equipment in hazardous environments requiring fail–safe performance, such as in the operation of nuclear facilities, aircraft navigation or communication systems, air traffic control, direct life support machines or weapons systems in which the failure of the product could lead directly to death, personal injury or severe physical or environmental damage (‘High-Risk Activities’). Riverdi and its suppliers specifically disclaim any expressed or implied warranty of fitness for High-Risk Activities. Using Riverdi products and devices in 'High-Risk Activities' and in any other application is entirely at the buyer’s risk, and the buyer agrees to defend, indemnify and hold harmless Riverdi from all damages, claims or expenses resulting from such use. No licenses are conveyed, implicitly or otherwise, under any Riverdi intellectual property rights.

# 15. CONTACT

## Your Success is Our Priority

Stuck on a technical challenge? Need expert guidance?
Our dedicated support team is just a message away.

Contact us at
**contact@riverdi.com**

We're here to ensure your project's success, every step of the way!